09.00424.000 | 14/04/16
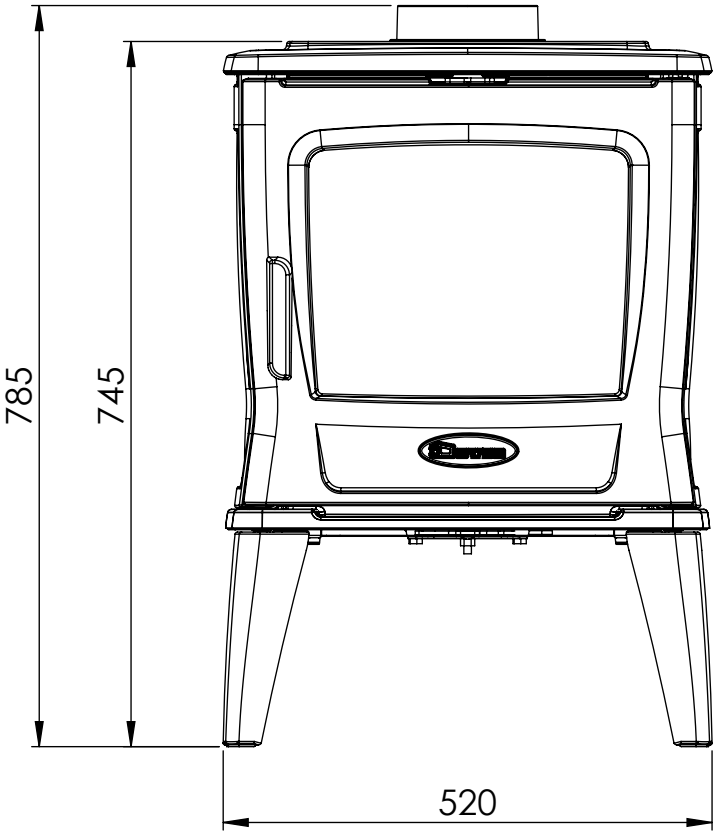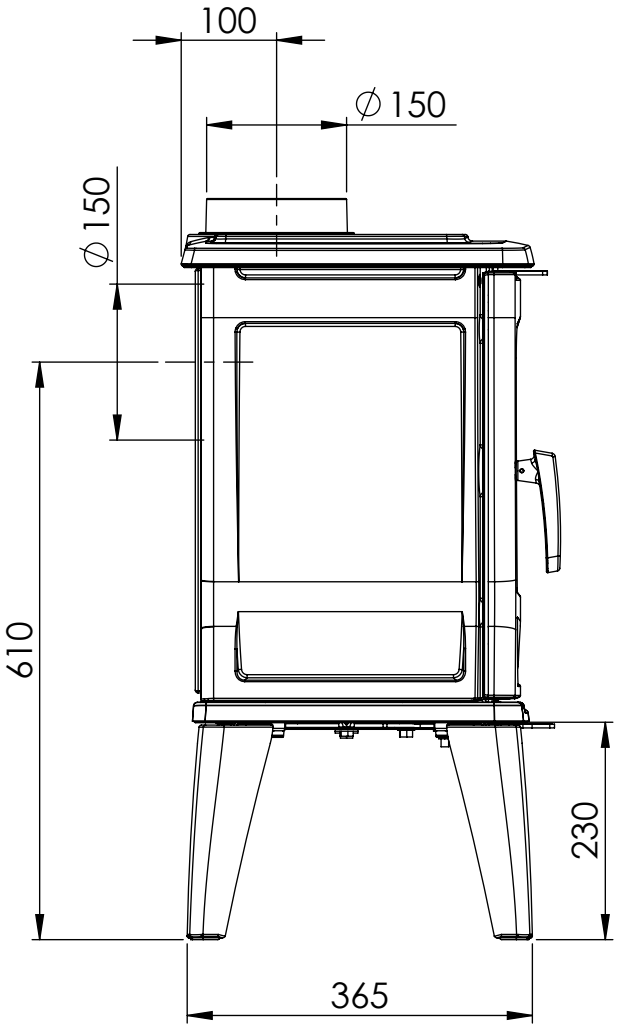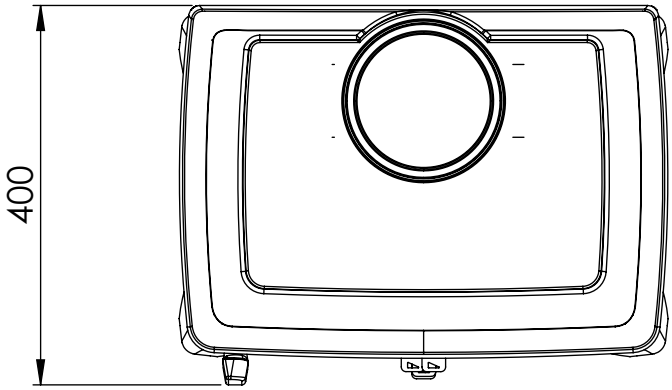
TAI 35 WT